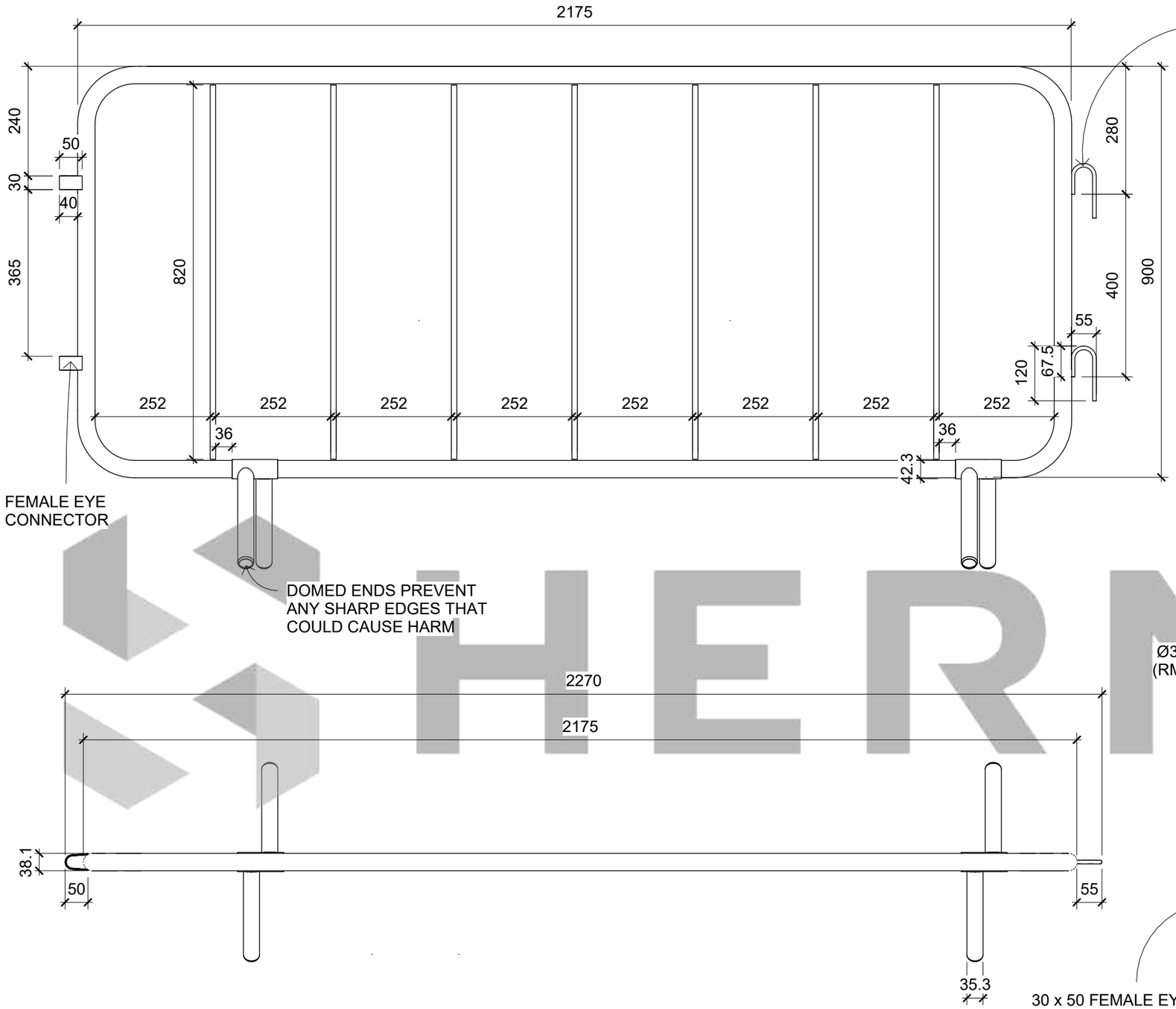

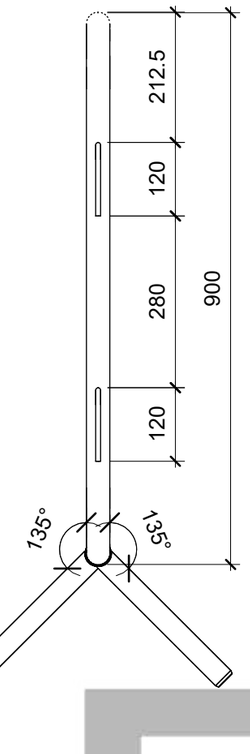

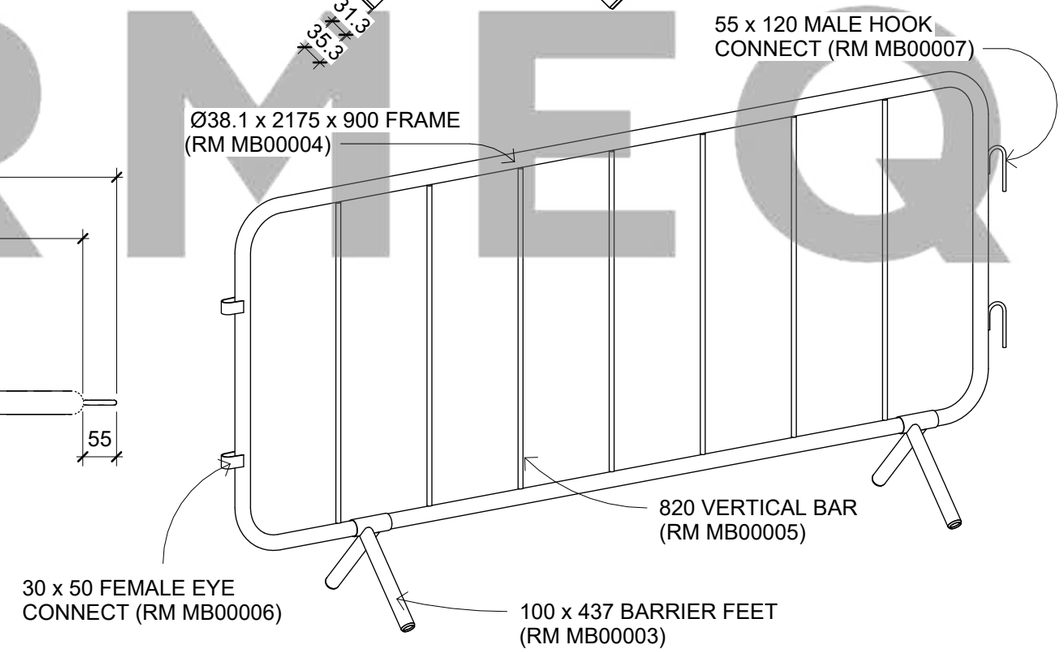

General Comments

See Our Associated Accessories:

- Basic Walkthrough Barrier
- Advanced Walkthrough Barrier
- Crowd Control Barrier Stillage
- Crowd Control Barrier Trolley
- Crowd Control Barrier Covers - Basic
- Crowd Control Barrier Covers - Standard
- Polypropylene Sandbags
- Plastic Coated Concrete Ballast Block

See Our Associated Products:

- Crowd Control Barrier - Loose Leg
- Crowd Control Barriers - Fixed Leg

Materials

Pre - Galvanised Steel

Can Be Powder Coated Upon Request

HERMEQ
In Ground, On Ground & Above Ground Equipment
Email: sales@hermeq.com Phone: 0121 725 2338

No.	Description	Date

Item	Component Description	Quantity
RM MB00003	G3mm - 100mm x 437mm BARRIER FEET	2
RM MB00004	G0.9mm - Ø38.1mm x 2175mm x 900mm FRAME	1
RM MB00005	GØ12mm - 820mm VERTICAL BAR	7
RM MB00006	G2.5mm - 30mm x 50mm F EYE CONNECT	2
RM MB00007	GØ8mm - 55mm x 120mm M HOOK CONNECT	2

ECO CROWD CONTROL BARRIER - FIXED LEGS

Weight	N/A	Serial Number	Revision
Date	25/05/2023	MB003420	
Drawn by	JT		
Checked by	PM	Scale	1 : 10 @A3